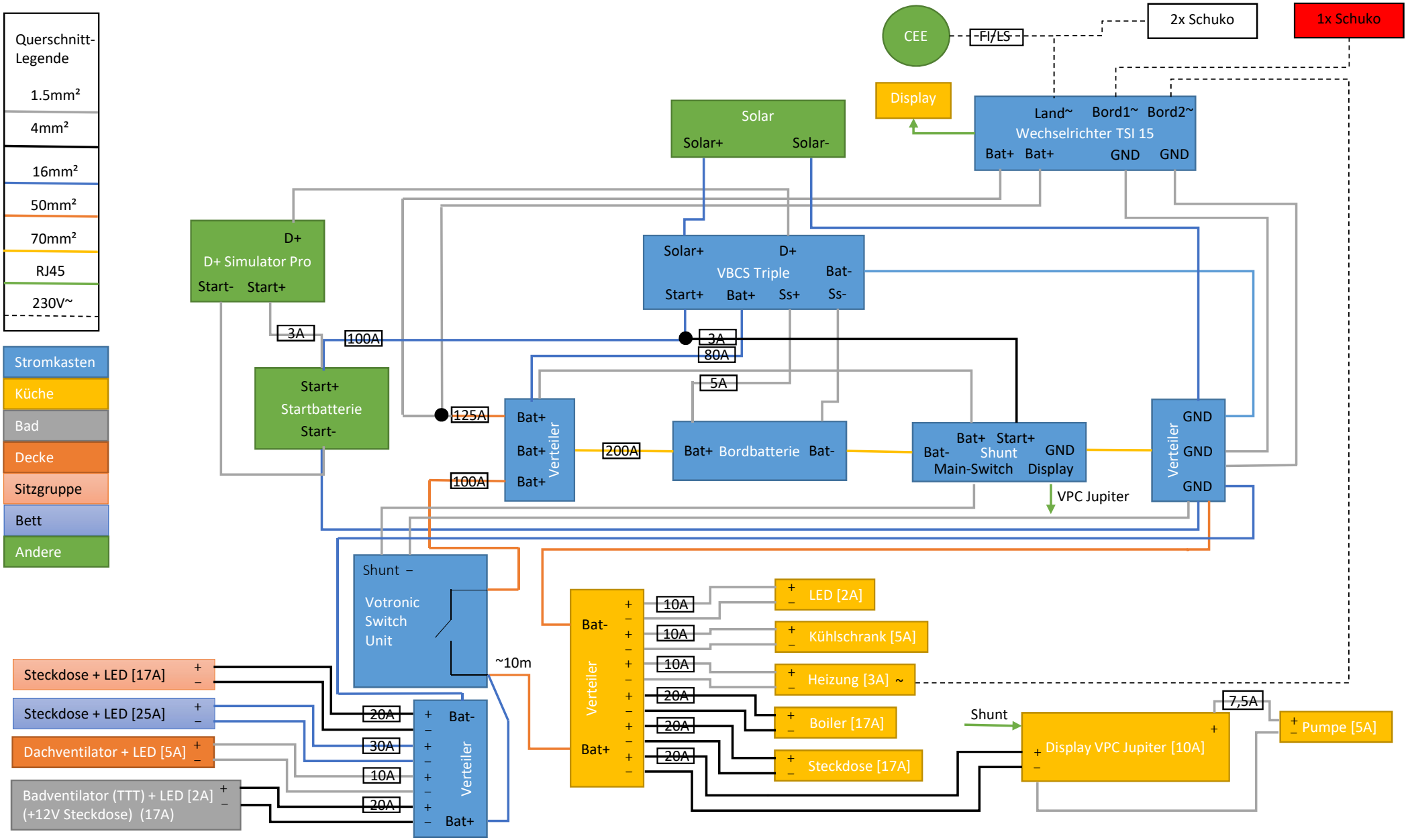
Querschnitt-Legende
1.5mm²
4mm²
16mm²
50mm²
70mm²
RJ45
230V~
Stromkasten
Küche
Bad
Decke
Sitzgruppe
Bett
Andere
CEE
FI/LS
2x Schuko
1x Schuko
Display
Solar
Solar+
Solar-
Land~
Bord1~
Bord2~
Wechselrichter TSI 15
Bat+
Bat+
GND
GND
D+
D+ Simulator Pro
Start-
Start+
Solar+
D+
VBCS Triple
Bat-
Start+
Bat+
Ss+
Ss-
3A
100A
3A
80A
5A
Start+
Startbatterie
Start-
125A
Bat+
Bat+
Bat+
Verteiler
200A
Bat+
Bordbatterie
Bat-
Bat+
Start+
Bat-
Shunt
GND
Main-Switch
Display
VPC Jupiter
GND
GND
GND
Verteiler
100A
Shunt –
Votronic
Switch
Unit
~10m
Bat-
Verteiler
Bat+
10A
10A
10A
20A
20A
20A
LED [2A]
Kühlschrank [5A]
Heizung [3A] ~
Boiler [17A]
Steckdose [17A]
Steckdose + LED [17A]
Steckdose + LED [25A]
Dachventilator + LED [5A]
Badventilator (TTT) + LED [2A]
(+12V Steckdose) (17A)
20A
30A
10A
20A
Bat-
Verteiler
Bat+
Shunt
Display VPC Jupiter [10A]
7,5A
Pumpe [5A]